Use for installed system expansion applications:

Refer to TrueAlert Addressable Controller and 4100ES TPS Reference Specifications for appliance compatibility details

TrueAlert Addressable Operation Features

Each individually addressed notification appliance receives power and control over a single wire pair providing:

- Supervised wiring connections to each appliance that support using "T-tapped" wiring for Class B circuits (Class A circuits require in/out wiring)
- Horns sounding with selectable high or low output, as Temporal 3 or March Time pattern (60 or 120 bpm), or Steady On, controlled separately from visible appliances on the same two-wire circuit
- Visible appliances operating synchronized at 1 Hz
- Control over power limited, isolated output Signaling Line Circuits (SLCs) with up to 63 addressable appliances per SLC, and up to 189 appliances per control source (refer to TrueAlert Addressable Controller and 4100ES TPS Reference Specifications for detailed SLC ratings)
- Control sources selectable to provide individual appliance magnetic test mode and appliance LED polling indicator
- 4100ES, and 4010ES systems also provide additional control capabilities using Virtual NAC (VNAC) appliance groupings across SLCs and across control sources

Class B, "T-tapped" wiring advantages:

- Less wiring distance is required since traditional end-of-line Class B wiring supervision is not needed
- With less wiring distance required, voltage drops can be reduced, allowing more appliances per wire run

UL listed to Standard 864*

4100ES TrueAlert Power Supplies (TPS)

For mounting in 4100ES control panels:

- Three, 3 A, SLCs (Special Application rating)

TrueAlert Addressable Controllers

Remote mounted control panel that provides:

- Three, 2.5 A, SLCs (Special Application rating)
- An 8 A power supply/battery charger for internal batteries up to 12.7 Ah or up to 18 Ah in external cabinet

Multiple communications formats are available:

- **Remote Unit Interface (RUI) communications** from Autocall 4100ES/4010ES fire alarm control panels assigns an address point with custom label to each appliance for individual trouble reporting
- **Wired control** from conventional NACs connects with multiple options

Extensive internal diagnostics include:

- LED status indicators that identify channel and trouble
- Support for host fire alarm control panel WALKTEST system test with IDNet or RUI communications**
- Status monitoring of battery, input power, and earth faults

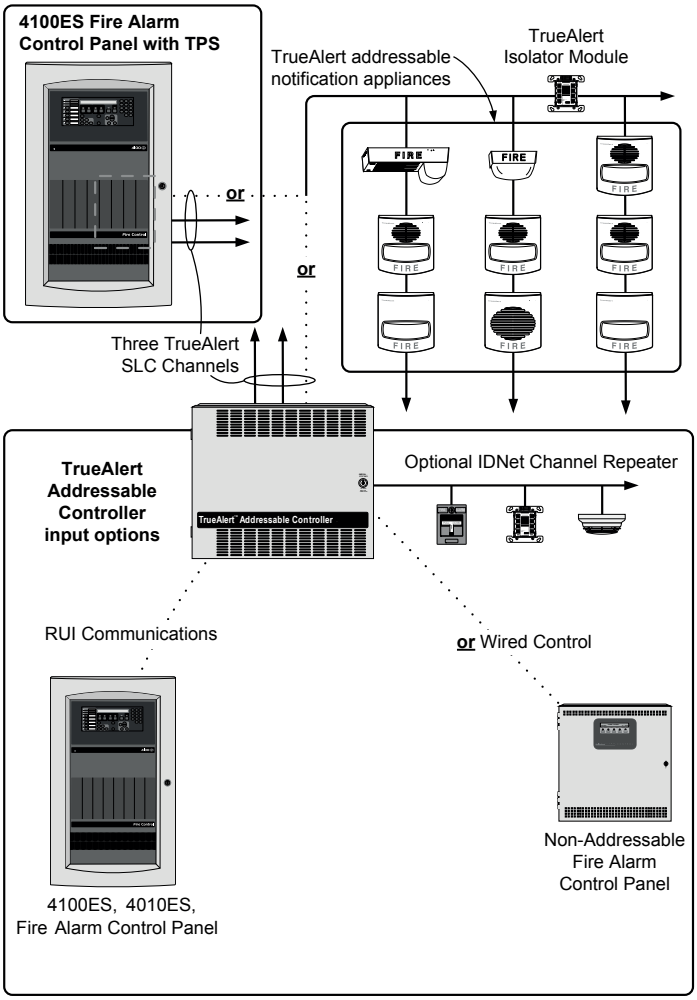

Figure 1: TrueAlert Addressable Operation Reference Diagram

Optional internal modules:

- Class A Three Channel Adapter Module
- IDNet Communications: Repeater or Fiber Optic Receiver/Repeater; models for Class A or Class B

External accessories:

- IDNet communication fiber optic transmitters
- Remote TrueAlert communications isolator A4905-9929
- External battery cabinet for 18 Ah batteries

* Additional listings may be applicable; contact your local product supplier for the latest status.

Introduction

TrueAlert addressable notification appliances are individually addressed and receive power, supervision, and control from a TrueAlert Signaling Line Circuit (SLC). For wired control systems, strobe flashes and horn outputs are synchronized per controller. For RUI and IDNet communications control, controllers on the same host control panel are synchronized. (Combination speaker/strobe TrueAlert appliances receive audible control from separate audio circuit wiring.)

TrueAlert addressable operation allows strobes to be wired onto the same two-wire SLC circuit as horns but with separately controlled operation. Typical applications are audible notification appliances activated as "on-until-silenced" and visible notification appliances activated as "on-until-reset."

TrueAlert Addressable Controller diagnostics can be implemented from the control panel including: Silent or Active individual appliance magnet test, appliance LED polling indication, or all appliance LEDs on.

RUI Communications Control

When used with fire alarm control panels that support RUI communications, the TrueAlert Addressable Controller can be connected to an RUI addressable communications channel along with other RUI addressable devices. The host panel can control multiple TrueAlert Addressable Controllers (maximum recommended is 20 per RUI connection). Refer to Figure 3 for additional information.

Address points and custom labels are assigned to each TrueAlert appliance allowing troubles to be reported individually. Additionally, individual device types are assigned and audible appliance coding types are selectable for high or low output (~5 dBA difference) and with operation as Temporal pattern, March Time pattern (60 or 120 bpm), or Steady On (continuous).

4100ES and 4010ES VNAC Details

Virtual NAC (VNACs) Operation Groupings provide control of TrueAlert appliances similar to conventional NAC operation but VNACs include appliances across SLCs and across SLC sources within a 4100ES or 4010ES controlled system. VNACs require point allocation, can be declared "public" for use in a Network fire alarm system, and can be manually controlled. (NOTE: The terms Virtual NAC, VNAC, and TrueAlert Zone refer to the same feature and are interchangeable.)

Custom VNACs. For programming convenience, there are default VNAC groups according to device type. Up to 56 custom VNACs (8 VNACs are system reserved) can be created per 4100ES TPS or per TrueAlert Addressable Controller connected to a 4100ES or 4010ES control panel. Appliances are able to be in up to three custom VNACs. (NOTE: Appliances assigned to multiple VNACs will remain ON if any of the VNACs are ON.)

4100ES, and 4010ES Fire Alarm Control Panels can be programmed for up to 247 total custom VNACs for increased selective signaling operation.

TrueAlert Addressable Controller Product Selection

Table 1: Standard Models

SKU	Listings	Input voltage	Description
A009-9401*	UL, FM, CSFM, MEA (NYC)	120 VAC input	TrueAlert Addressable Controller with 3, Class B TrueAlert SLC channels and 8 A power supply

Table 2: Optional Modules (for on-site installation)

SKU	Description		Comments
A009-9812	Three channel Class A adapter		Select if required
A009-9809	IDNet Repeater, output is Class A or Class B		Select **either** an IDNet Repeater **or** a Fiber Optic Receiver as required
A009-9810	Class B	Fiber Optic with IDNet Repeater	
A009-9811	Class A (Class X input)		
4009-9805	Red Appliqué for door		Select if required, 16-1/8" W x 5-1/2" H (410 mm x 140 mm)

Table 3: External Accessories (select per system requirements)

SKU	Description		Comments
A4090-9105	Class B	IDNet Fiber Optic Transmitter	Mounts in six-gang electrical box, refer to page 6 for mounting details
A4090-9107	Class A (Class X output)		
A4905-9929	Remote TrueAlert Communications Isolator		
A009-9801	External battery cabinet for 18 Ah batteries,beige		16-1/4" W x 13-1/2" H x 5-3/4" D (413 mm x 343 mm x 146 mm)

Table 4: Battery Selection (select battery size per system requirements; two batteries are required for 24 VDC operation)

SKU	Description
2081-9272	6.2 Ah Battery, 12 VDC
2081-9274	10 Ah Battery, 12 VDC
2081-9275	18 Ah Battery, 12 VDC; requires external battery cabinet

* A009-9401 has been seismic tested and is certified to IBC and CBC standards as well as to ASCE 7 categories A through F, requires battery brackets.

4100ES VNAC Wiring Reference

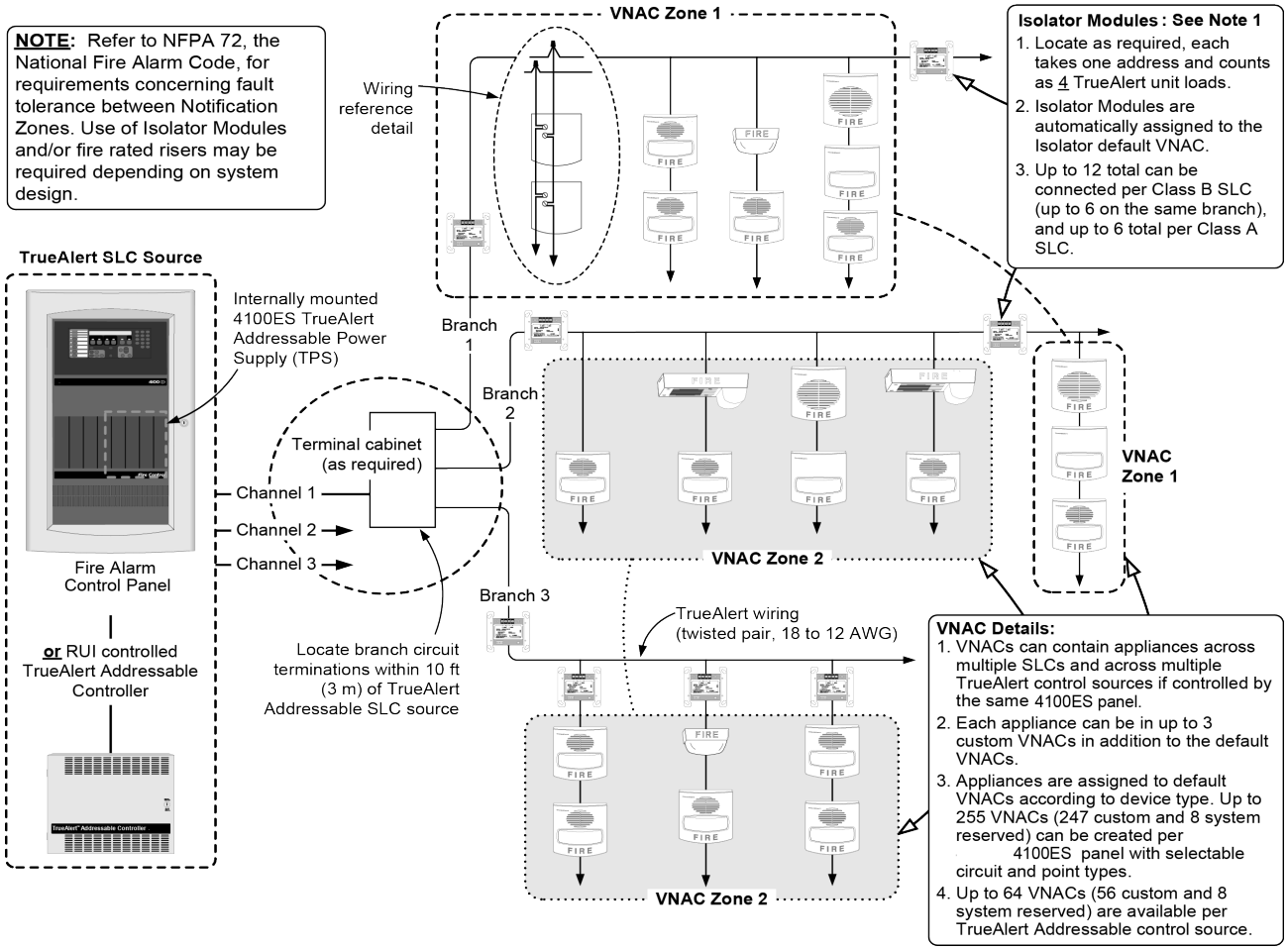

Figure 2: VNAC wiring reference diagram

Note:

- A4905-9929 Isolator Modules
- 4100ES Fire Alarm Control Panel. The 4100ES is shown.

RUI Communications Wiring Reference

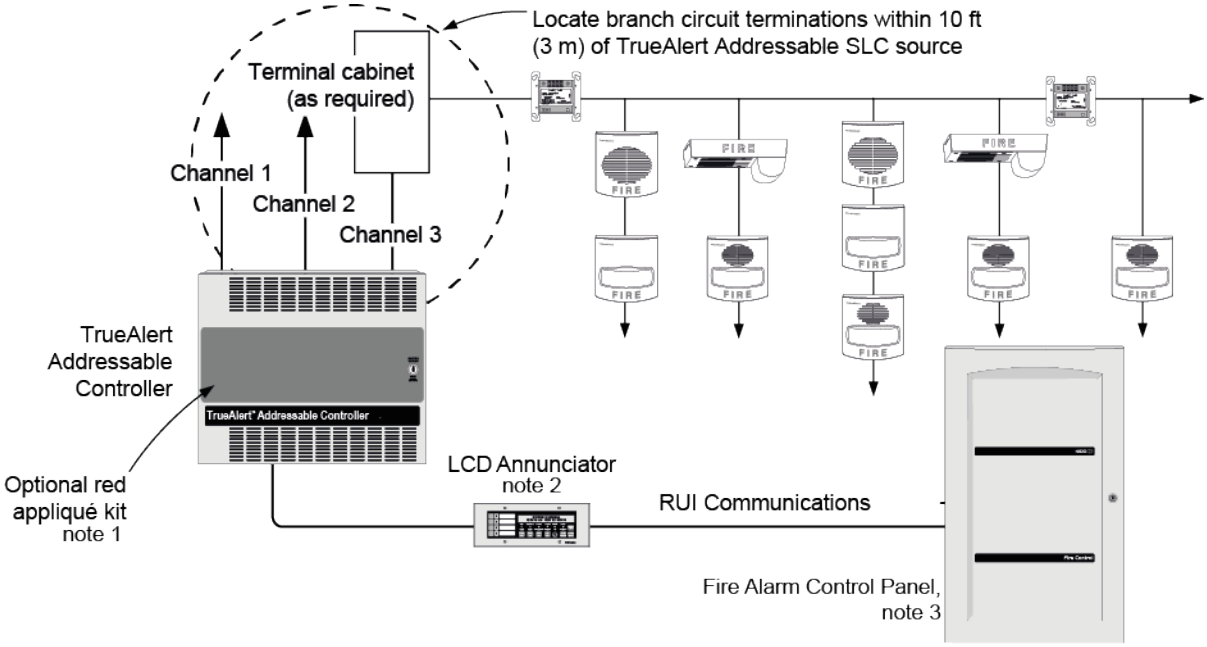

Figure 3: RUI communications wiring reference diagram

Note:
- 4009-9805 optional red appliqué kit
- A4603-9101 LCD Annunciator
- 4100ES, or 4010ES Fire Alarm Control Panel. 4100ES shown.

RUI Communications Rules Summary:
1. Recommended limit of 20 TrueAlert Addressable Controllers. (4010ES has a maximum internal and external limit of 20 card addresses.)
2. Can be wired with other RUI devices (LCD Annunciator shown for reference).
3. Wiring distance is up to 2500 ft (762 m) continuous wiring, and up to 10,000 ft (3048 m) when "T" tapped (Class B only).
4. Minimum wiring is unshielded twisted pair (some applications may require shielded twisted pair, consult your Autocall product supplier for details).

IDNet Communications Input

Optional IDNet Repeater Modules. IDNet communications can be repeated with the optional IDNet Repeater Module or with the optional Fiber Optic Receiver Module. Up to 100 of the IDNet channel points can be repeated once (see illustrations below). Repeated IDNet communications also support the "device level" earth fault location utility of the host panel.

TrueAlert Addressable Controller with Wired IDNet Input Control

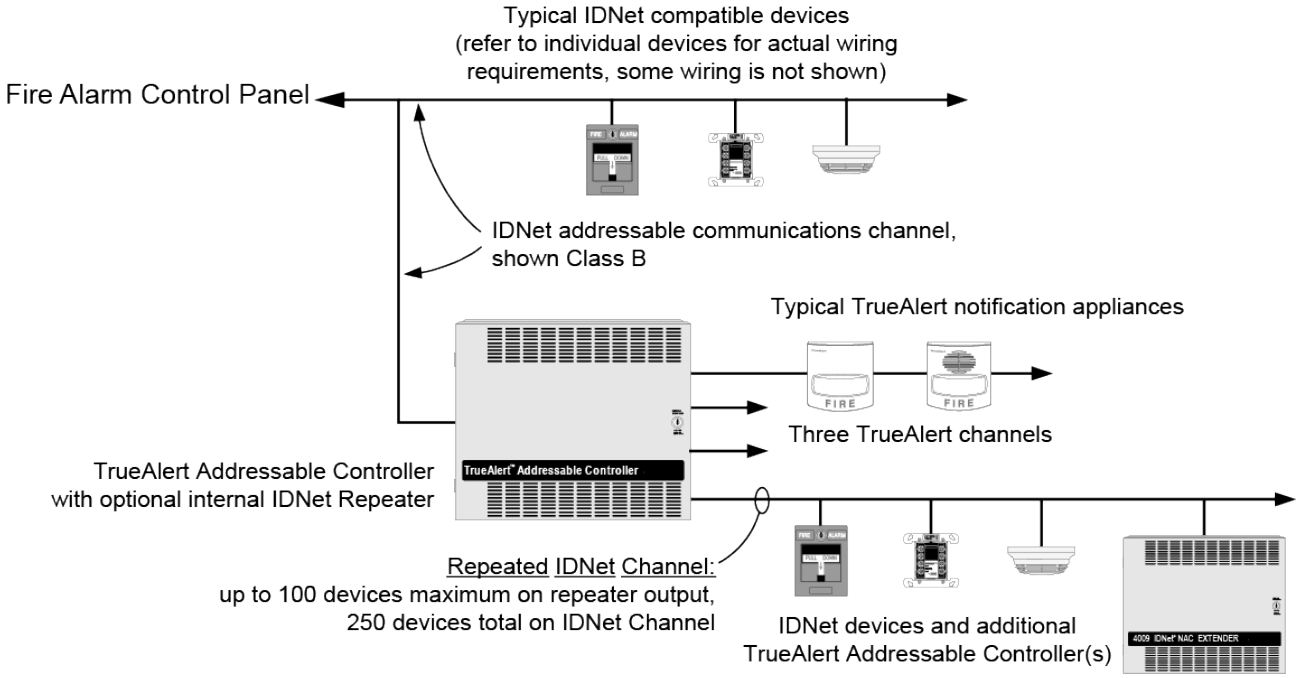

Figure 4: TrueAlert Addressable Controller with Wired IDNet input control

TrueAlert Addressable Controller with Fiber Optic IDNet Input Control

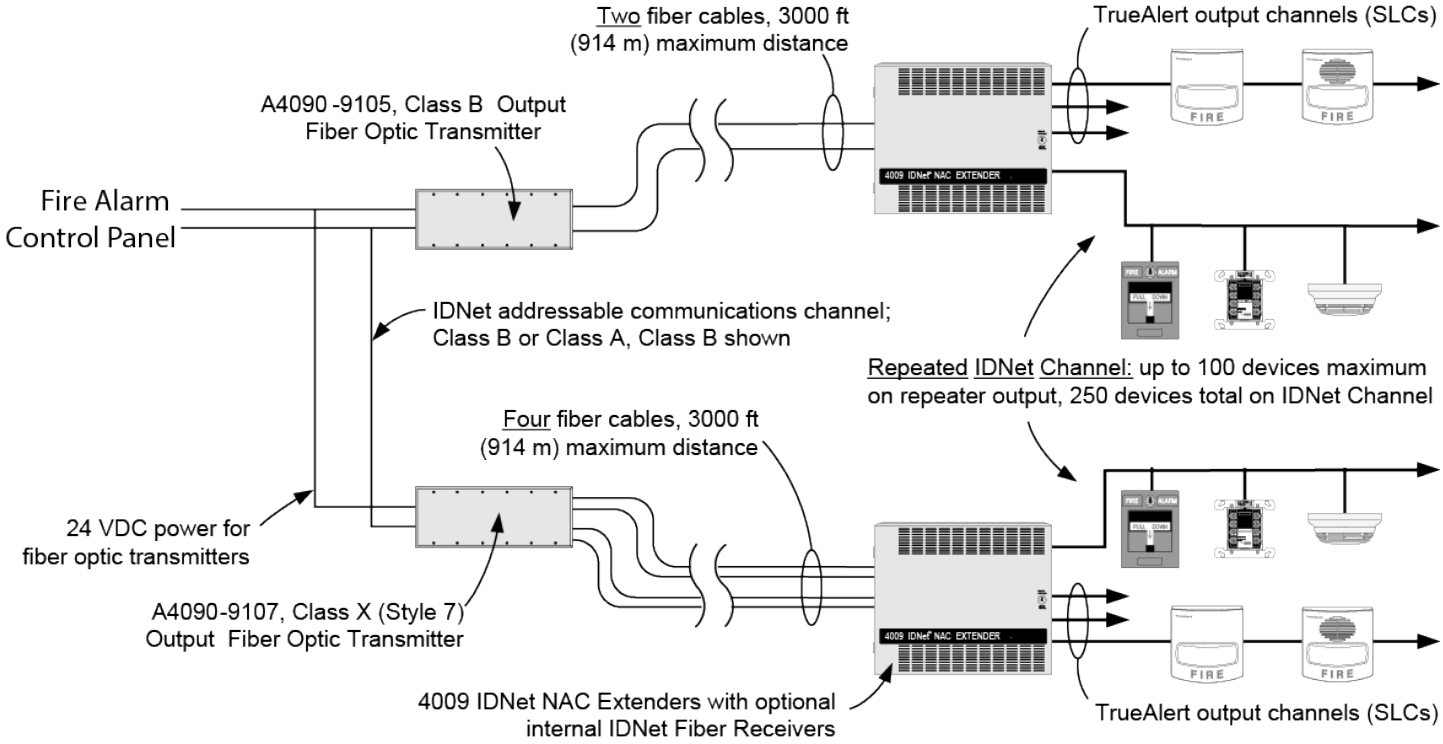

Figure 5: TrueAlert Addressable Controller with Fiber Optic IDNet input control

Wired NAC Input Connection Information

Wired Conventional NAC Input Compatible.

For applications where existing (or new) conventional Notification Appliance Circuits (NACs) are available, the TrueAlert Addressable Controller can be controlled directly from the NACs. (Refer to diagram below.)

Flexible Connection Choices.

Two NACs, from either the same, or from different host fire alarm control panels, can be connected to control the TrueAlert output channels. Multiple control selections provide flexible operation. (Refer to table below.)

NAC input to SLC output control

is selectable per the following table (configure NAC input as Steady On, uncoded):

Table 5: Output SLC Control Options

Input NAC	A	B
NAC 1	Controls visibles	Controls audibles and visibles on Channel 1
NAC 2	Controls audibles	Controls audibles and visibles on Channels 2 and 3

Strobe Output. TrueAlert Addressable Strobes are operated with synchronized flashes.

Horn Output. TrueAlert Addressable Horn operation is selectable per TrueAlert Addressable Controller as either: Temporal pattern, March Time pattern at either 60 or 120 bpm or Steady On.

Door Mounted Reference Label

A detailed programming and diagnostic label is located inside the front door providing a quick reference for both installation and checkout.

Service Diagnostic Features

Power-up Self-Diagnostics. Upon power-up, the TrueAlert Addressable Controller tests each module and performs earth fault diagnostics. Trouble conditions are communicated to the host control panel and are also displayed on internal LEDs.

System troubles via RUI or IDNet communications are reported with detailed information concerning which TrueAlert Addressable Controller is involved and the nature of the trouble. Messages include power and battery status, earth fault, channel troubles, address problems, and other information.

System Troubles via Wired Control. When controlled with conventional NAC inputs, common troubles are signaled by providing an open circuit that disconnects the NAC wiring from its end-of-line resistor but still allows a reversed polarity alarm to be received.

LED Status Indicators are provided for the following:

- **Five yellow status LEDs** provide 22 separate indications listed in priority of urgency. As a trouble is eliminated, any remaining trouble(s) will then be indicated until the TrueAlert Addressable Controller is returned to normal operation
- **Three separate yellow LEDs** indicate which of the three TrueAlert channels are involved for channel specific troubles
- **AC power status** is indicated by a green LED that is on when AC is normal. During low AC (brownout) conditions or with no AC, the LED is off. Additional power and battery status is indicated by the general status LEDs

TrueAlert Addressable Controller with Wired Control

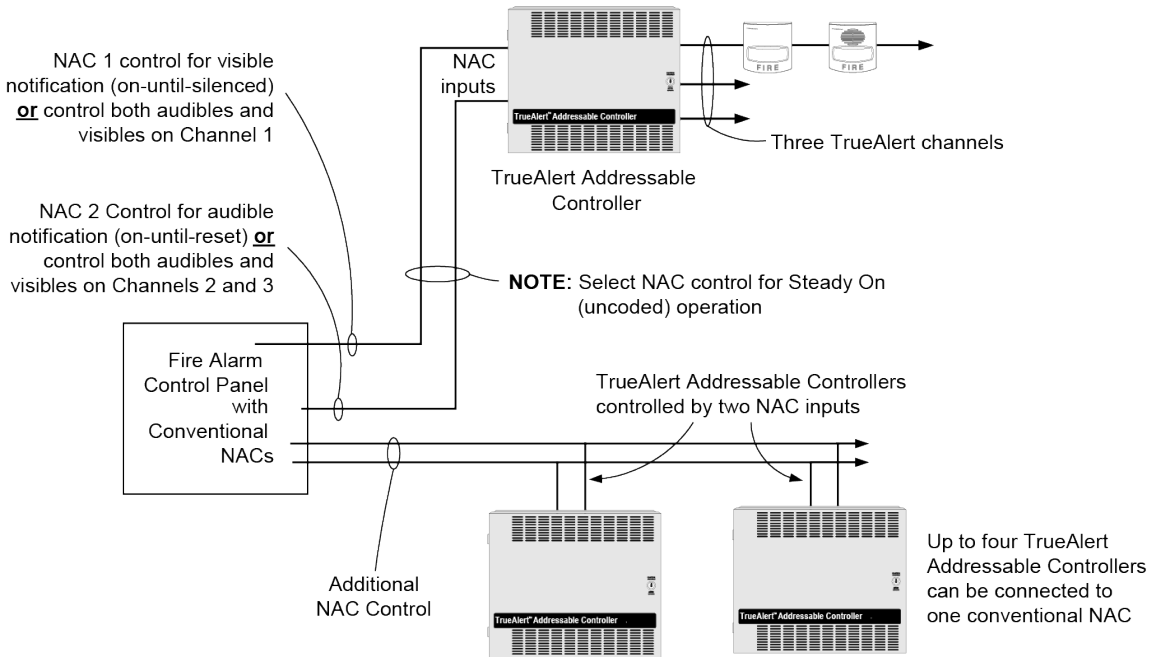

Figure 6: TrueAlert Addressable Controller with Wired Control

A4090-9105/ A4090-9107 IDNet Fiber Optic Transmitter Mounting Information

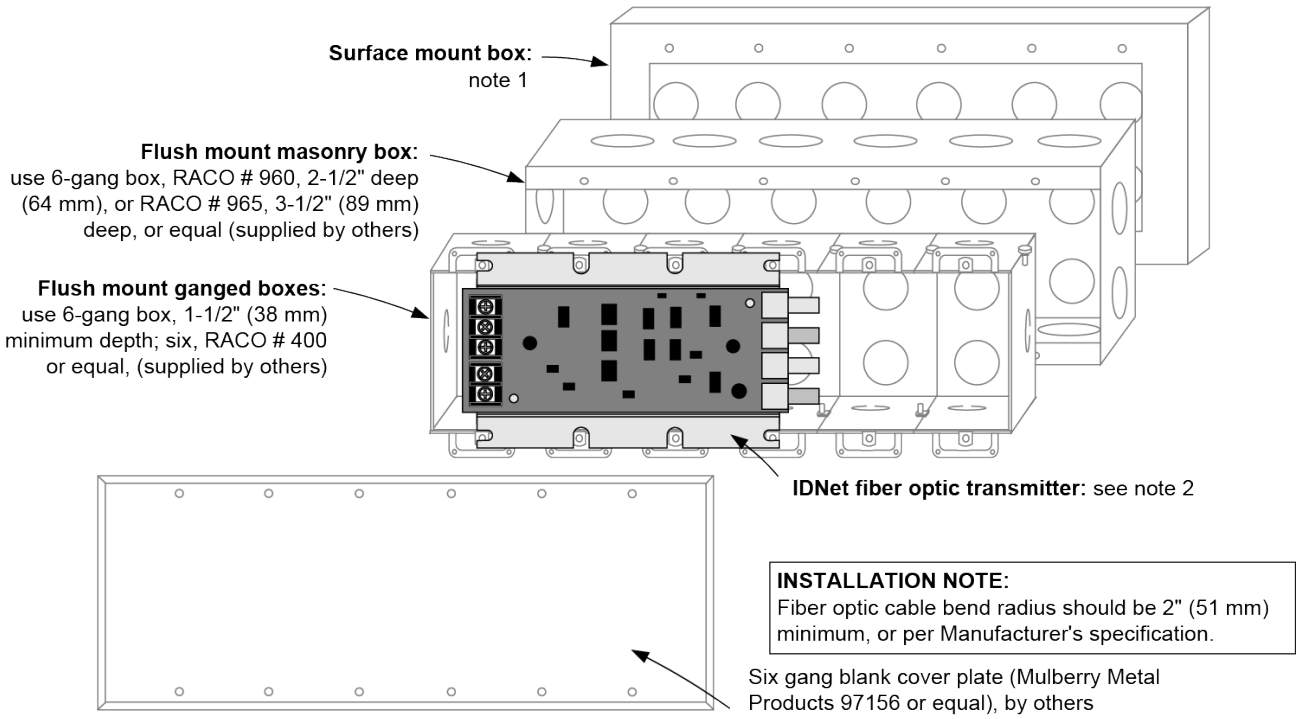

Figure 7: Mounting information

1. Autocall 2975-9217 surface mount box, ordered separately.
2. A4090-9107 Class X (Style 7) output: shown. A4090-9105, Class B (Style 4) output: not shown.

TrueAlert Addressable Controller Mounting and Module Placement Reference

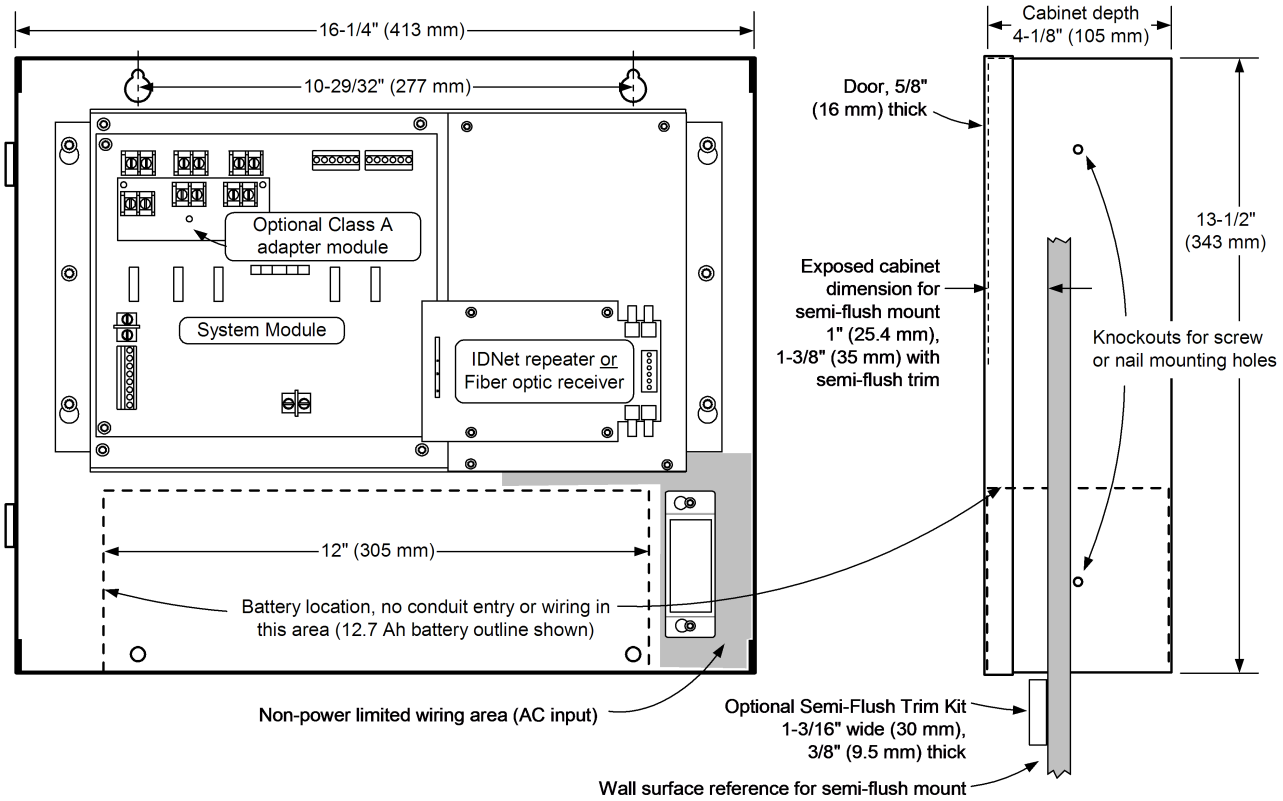

Figure 8: Mounting and module placement reference

Note:
Recommended conduit entrance varies with module selection. For model A009-9401 refer to Installation Instructions 574-762AC, specific option module installation instructions, and to Field Wiring Diagram 842-158 before locating conduit entrance.

TrueAlert Addressable Controller and 4100ES TPS Reference Specifications

Table 6: Input Voltages

Rating	Specification
120 VAC Input A009-9401	3 A @ 102-132 VAC, 60 Hz
Wired Control Input, requirements per circuit	3 mA @ 24 VDC; input voltage range = 16 to 33 VDC, filtered; control from conventional reverse polarity NA

Table 7: Output Ratings

Rating		Specification	
TrueAlert Channel Output Voltage (SLC)		19 to 31 VRMS, Special Application control	
Compatible Special Application Appliances		Autocall TrueAlert and TrueAlert ES addressable notification appliances (with limitations); contact your Autocall product representative for compatible appliances	
Appliance Control Characteristics	**Category**	**Details**	**TrueAlert ES Appliance Control Limitation**
	Available Strobe Intensity	15, 30, 75, and 110 cd	Not compatible with TrueAlert ES intensities of 135 and 185 cd
	Available Horn Control	Continuous, Temporal Code 3, and March Time of 60 or 120 bpm	Not compatible with TrueAlert ES horn tones of Temporal Code 4 or 20 bpm
	Appliance Voltage Minimum	17 VRMS	Not compatible with TrueAlert ES 23 VRMS appliance voltage minimum
SLC Ratings and Loading	TrueAlert Addressable Controller or 4100ES TPS	Up to 63 total addressable appliances	
		Up to 75 unit loads (appliances are 1 unit load)	
		Up to 32 fixed candela (legacy) strobes can be synchronized per SLC	

Table 7: Output Ratings

Rating		Specification
	TrueAlert Addressable Controllers	Up to 39 multi-candela strobes can be synchronized per SLC; total current per controller = 8 A
	4100ES TPS	Up to 46 multi-candela strobes can be synchronized per SLC; total current per TPS = 9 A
Auxiliary Output		500 mA @ 24 VDC nominal (requires 734-035 wiring harness)
TrueAlert SLC Wiring		UTP, unshielded twisted pair, 18 to 12 AWG
TrueAlert Strobe Wiring Distance		Maximum wiring distance between TrueAlert strobes is limited to 30 Ω wire resistance
Wiring Connections		Terminal blocks for 18 to 12 AWG

Table 8: Optional Modules

Rating			Description
IDNet Repeater Module (A009-9809)	Input Power		70 mA @ 24 VDC, system supplied
	IDNet Input, One Address		Maximum distance from IDNet source is 2500 ft (762 m)
	IDNet Output Specifications		Repeated IDNet output for up to 100 devices (total IDNet devices not to exceed 250 per channel)
			Refer to specific panels details for additional IDNet communications specifications
Fiber Optic Receiver Modules	Input Current	A009-9810	Class B, 65 mA @ 24 VDC, system supplied
		A009-9811	Class X (Style 7), 80 mA @ 24 VDC, system supplied **Note:** Fiber optic input is Class X, repeated IDNet output is Class A)
	IDNet Output Specifications		Same as those for Repeater Module (see above)
	Fiber Optic Transmission		Distance = 3000 ft (914 m) maximum
General	Operating Temperature		32° to 120° F (0° to 49° C)
	Operating Humidity Range		10% to 90% RH from 32° to 104° F (0° to 40° C)

Fiber Optic Transmitter Specifications

Table 9: Specifications

Rating		Description
Input Voltage		18.9-32 VDC from compatible listed fire alarm supply
Input Current	A4090-9105	Class B, 30 mA @ 24 VDC
	A4090-9107	Class X (Style 7), 35 mA @ 24 VDC
Fiber Optic Connections and Cable Requirements (Type ST Connectors)	A4090-9105	Class B input, two fiber cables required
	A4090-9107	Class X (Style 7) input, four fiber cables required
Module Size (with mounting bracket)		6-13/16" W x 3-3/4" H x 1-1/8" D (173 mm x 95 mm x 29 mm)
On-board Status Indicators	Green LED	Flashing = transmit
	Red LED	Flashing = receive
	A4090-9107	Separate Red LED = Class X (Style 7) receive
Communications		Autocall IDNet format
Fiber Optic Transmission Distance		3000 ft (914 m) maximum
Wiring Connections		Terminal blocks for 18 to 12 AWG
Operating Humidity		Up to 90% RH, non-condensing @ 100° F (38° C)
Operating Temperature		32° to 120° F (0° to 49° C)

TrueAlert Addressable Controller Current Reference

Table 10: Panel Module Selection (shaded model numbers are optional modules)

SKU	Description		Supervisory Current	Actual Supervisory	Alarm Current	Actual Alarm	
A009-9401	120 VAC input	Basic Panel	88 mA	88 mA	195 mA	195 mA	
A009-9812	Class A Adapter		7 mA	+	7 mA	+	
A009-9809*	IDNet Repeater		70 mA	+	70 mA	+	
A009-9810 *†	Fiber Optic Receiver, Class B		65 mA		65 mA		
A009-9811* †	Fiber Optic Receiver, Class X		80 mA		80 mA		
IDNet Devices, 0.7 mA each, maximum of 100 (see Procedure Note 5)			total devices x 0.7 mA each	+	total devices x 0.7 mA each	**(A1)**	+

Table 10: Panel Module Selection (shaded model numbers are optional modules)

SKU	Description	Supervisory Current	Actual Supervisory	Alarm Current	Actual Alarm	
TrueAlert Appliances/Devices, Supervisory Current, 0.2 mA per unit load, add devices from all 3 SLCs (see Procedure Note 7)		total loads x 0.2 mA each	+			
TrueAlert Isolators; each requires 1 address and four (4) unit loads		total Isolators x 10 mA	+	total Isolators x 10 mA	+	
Auxiliary Power Output, calculate per total device requirements (see Procedure Note 5)		500 mA maximum	+	500 mA maximum	**(A2)**	+
Total Supervisory Current =			**(A)**			
Total TrueAlert Addressable Controller Panel Alarm Current =					**(B1)**	
* Only one of these three modules can be chosen for a single TrueAlert Addressable Controller. **Note:** † IDNet Fiber Optic Transmitter current is supplied from the host fire alarm control panel.						

Table 11: TrueAlert Channel Notification Appliance Current Loads

	Channel Number	NAC Alarm Current	
TrueAlert Channel (SLC) 2.5 A maximum per channel (see Procedure Note 5)	Channel 1		
	Channel 2	+	
	Channel 3	+	
Total TrueAlert Channel Loads Alarm Current =		**(C)**	
Total TrueAlert Addressable Controller Panel Alarm Current (enter B1 from above) =		**(B2)**	**+**
Total Alarm Current =		**(D)**	

Procedure:

1. Calculate total panel supervisory current **(A)**.
2. Calculate total panel alarm current **(B1)** [convert mA to A, example: 350 mA = 0.35 A]. Copy **(B1)** into block **(B2)**.
3. Calculate total NAC loads alarm current from notification appliance ratings **(C)**.
4. Add **(C)** + **(B2)** to determine total alarm current **(D)**.
5. Total of IDNet Device Current **(A1)** + Auxiliary Power Output Current **(A2)** + SLC Loads Alarm Current **(C)** is 8 A maximum.
6. Refer to Autocall battery selection document 900-012 for recommended battery size for specific standby requirements (i.e., 24 hours supervisory, 5 minutes of alarm). Internal cabinet space is provided for batteries up to 12.7 Ah.
7. Most TrueAlert appliances/devices are one unit load, Isolators are 4 unit loads. Refer to Field Wiring Diagram 842-158.